7.3L

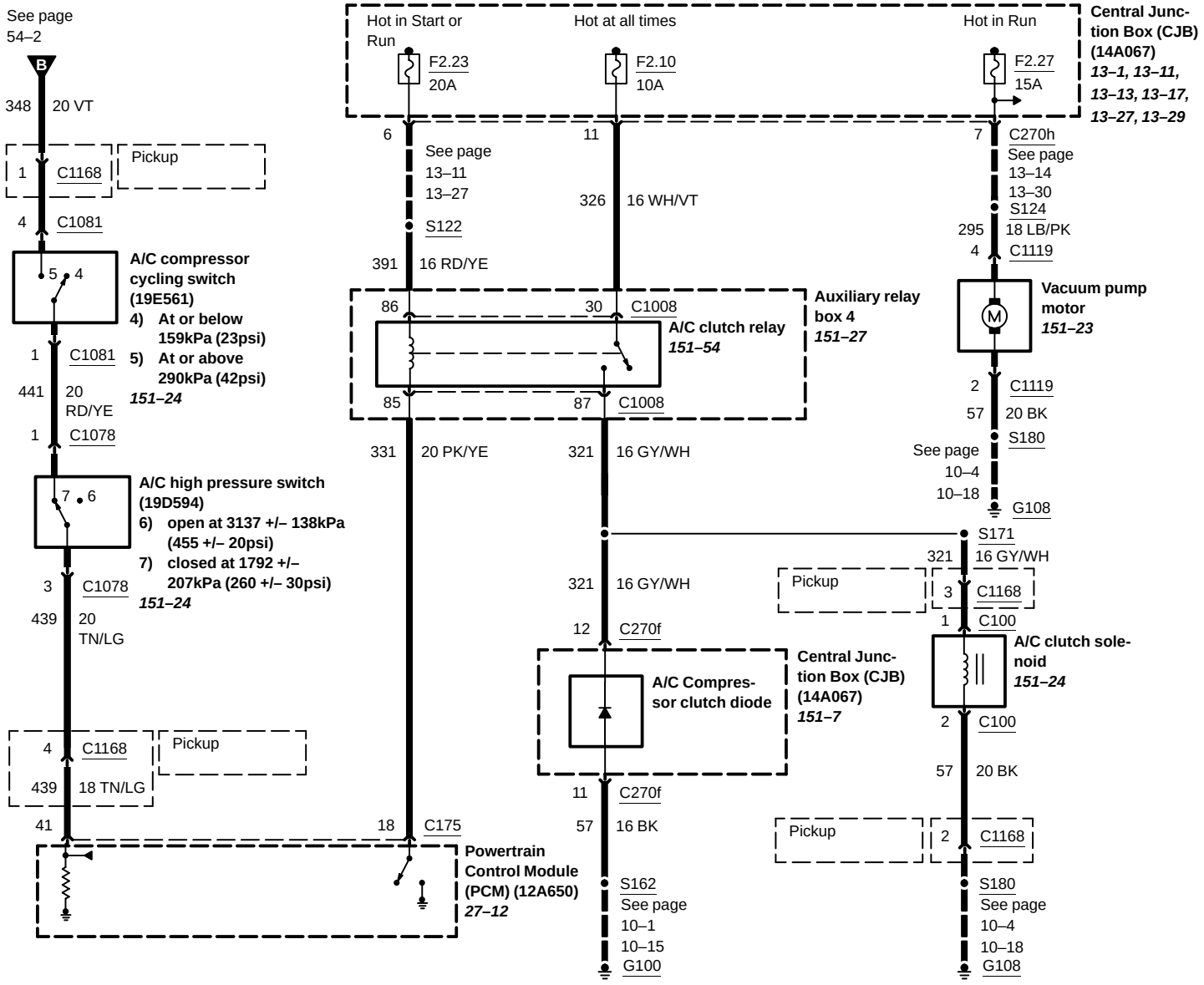
See page 54–2
B
348 20 VT
1 C1168
Pickup
4 C1081
A/C compressor cycling switch (19E561)
4) At or below 159kPa (23psi)
5) At or above 290kPa (42psi)
151–24
1 C1081
441 20 RD/YE
1 C1078
A/C high pressure switch (19D594)
6) open at 3137 +/– 138kPa (455 +/– 20psi)
7) closed at 1792 +/– 207kPa (260 +/– 30psi)
151–24
3 C1078
439 20 TN/LG
4 C1168
Pickup
439 18 TN/LG
41
Hot in Start or Run
Hot at all times
Hot in Run
F2.23 20A
F2.10 10A
F2.27 15A
Central Junction Box (CJB) (14A067)
13–1, 13–11, 13–13, 13–17, 13–27, 13–29
6
See page 13–11 13–27
S122
391 16 RD/YE
11
326 16 WH/VT
7 C270h
See page 13–14 13–30
S124
295 18 LB/PK
4 C1119
Vacuum pump motor
151–23
86
30 C1008
A/C clutch relay
151–54
Auxiliary relay box 4
151–27
85
87 C1008
2 C1119
57 20 BK
S180
See page 10–4 10–18
G108
331 20 PK/YE
321 16 GY/WH
321 16 GY/WH
12 C270f
A/C Compressor clutch diode
Central Junction Box (CJB) (14A067)
151–7
11 C270f
57 16 BK
S162
See page 10–1 10–15
G100
18 C175
Powertrain Control Module (PCM) (12A650)
27–12
S171
321 16 GY/WH
Pickup
3 C1168
1 C100
A/C clutch solenoid
151–24
2 C100
57 20 BK
Pickup
2 C1168
S180
See page 10–4 10–18
G108