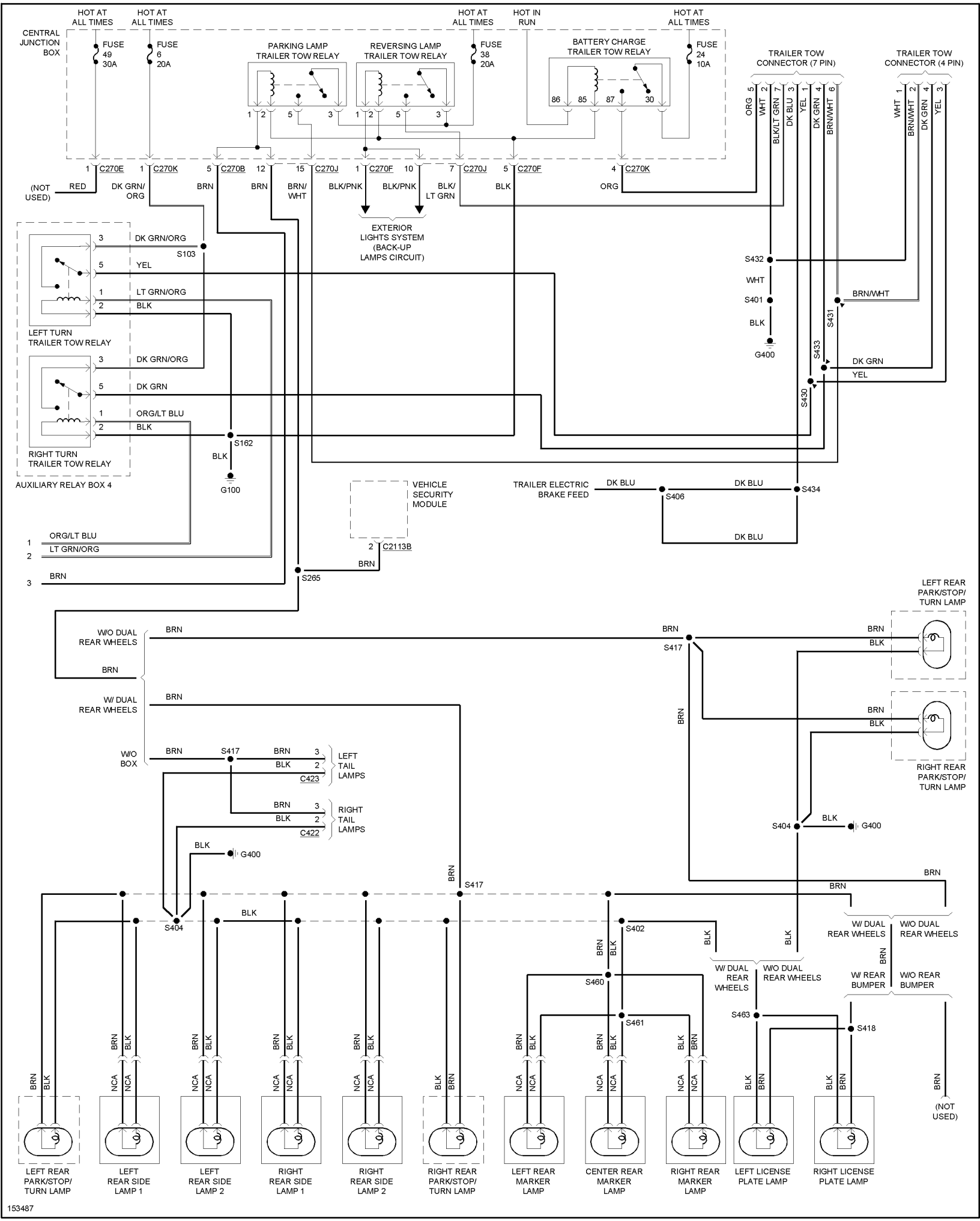
CENTRAL JUNCTION BOX
HOT AT ALL TIMES
FUSE 49 30A
FUSE 6 20A
FUSE 38 20A
HOT IN RUN
FUSE 24 10A
PARKING LAMP TRAILER TOW RELAY
REVERSING LAMP TRAILER TOW RELAY
BATTERY CHARGE TRAILER TOW RELAY
TRAILER TOW CONNECTOR (7 PIN)
TRAILER TOW CONNECTOR (4 PIN)
C270E
C270K
C270B
C270J
C270F
(NOT USED)
EXTERIOR LIGHTS SYSTEM (BACK-UP LAMPS CIRCUIT)
LEFT TURN TRAILER TOW RELAY
RIGHT TURN TRAILER TOW RELAY
AUXILIARY RELAY BOX 4
S103
S162
G100
S432
S401
G400
S431
S433
S430
VEHICLE SECURITY MODULE
C2113B
S265
TRAILER ELECTRIC BRAKE FEED
S406
S434
W/O DUAL REAR WHEELS
W/ DUAL REAR WHEELS
W/O BOX
S417
C423
C422
LEFT TAIL LAMPS
RIGHT TAIL LAMPS
S404
S402
S460
S461
S463
S418
W/ DUAL REAR WHEELS
W/O DUAL REAR WHEELS
W/ REAR BUMPER
W/O REAR BUMPER
LEFT REAR PARK/STOP/ TURN LAMP
RIGHT REAR PARK/STOP/ TURN LAMP
LEFT REAR SIDE LAMP 1
LEFT REAR SIDE LAMP 2
RIGHT REAR SIDE LAMP 1
RIGHT REAR SIDE LAMP 2
LEFT REAR MARKER LAMP
CENTER REAR MARKER LAMP
RIGHT REAR MARKER LAMP
LEFT LICENSE PLATE LAMP
RIGHT LICENSE PLATE LAMP
153487