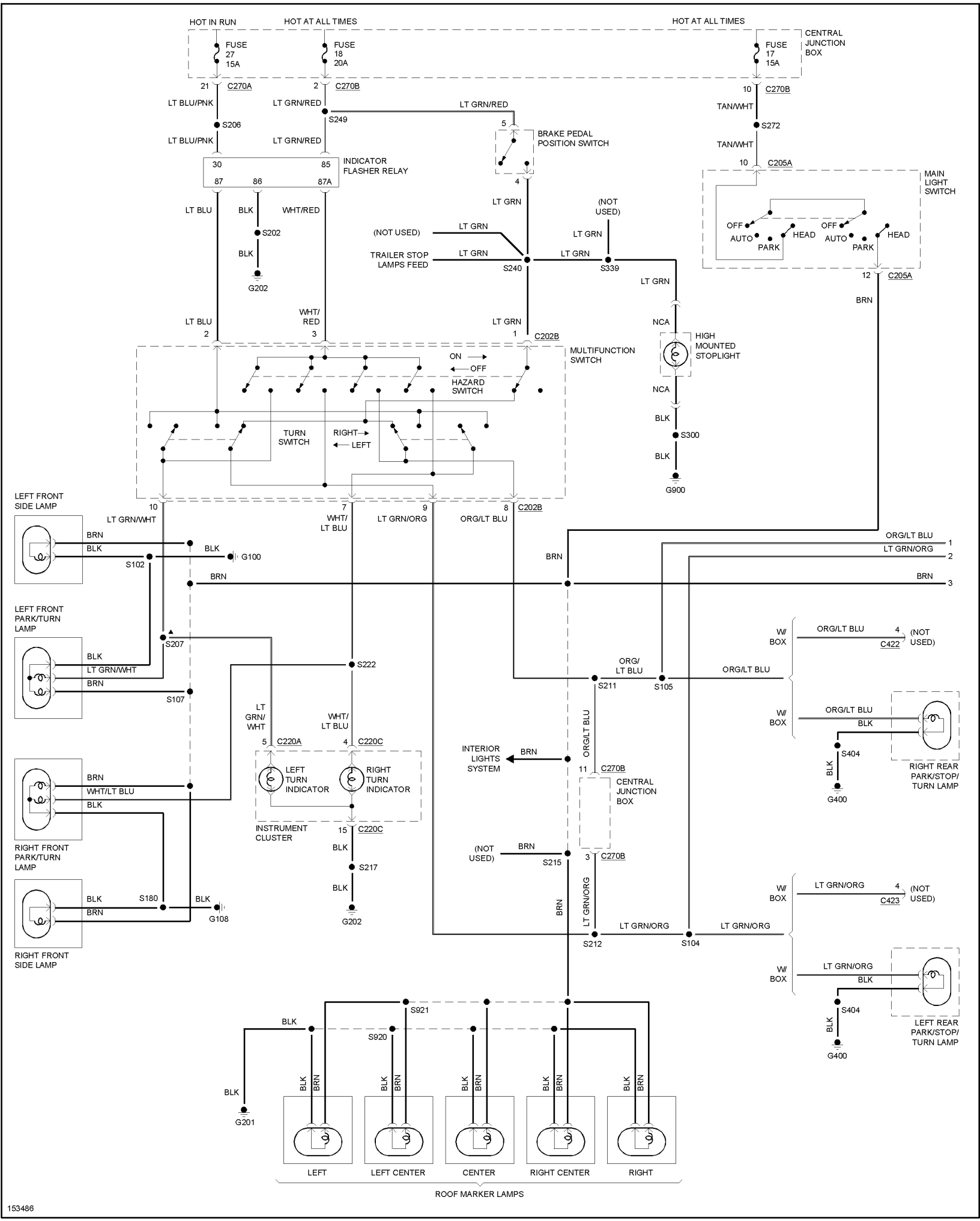
HOT IN RUN
HOT AT ALL TIMES
HOT AT ALL TIMES
CENTRAL JUNCTION BOX
FUSE 27 15A
FUSE 18 20A
FUSE 17 15A
21 C270A
2 C270B
10 C270B
LT BLU/PNK
LT GRN/RED
LT GRN/RED
TAN/WHT
S206
S249
S272
LT BLU/PNK
LT GRN/RED
TAN/WHT
BRAKE PEDAL POSITION SWITCH
INDICATOR FLASHER RELAY
30
85
87
86
87A
10 C205A
MAIN LIGHT SWITCH
OFF
AUTO
PARK
HEAD
LT BLU
BLK
WHT/RED
S202
BLK
G202
LT GRN
(NOT USED)
(NOT USED)
LT GRN
TRAILER STOP LAMPS FEED
LT GRN
LT GRN
S240
S339
12 C205A
LT GRN
BRN
LT BLU
2
WHT/ RED
3
LT GRN
1
C202B
NCA
HIGH MOUNTED STOPLIGHT
MULTIFUNCTION SWITCH
ON
OFF
HAZARD SWITCH
TURN SWITCH
RIGHT
LEFT
NCA
BLK
S300
BLK
G900
LEFT FRONT SIDE LAMP
10
LT GRN/WHT
7
WHT/ LT BLU
9
LT GRN/ORG
8
ORG/LT BLU
C202B
BRN
BLK
BLK
G100
S102
BRN
ORG/LT BLU
LT GRN/ORG
BRN
BRN
LEFT FRONT PARK/TURN LAMP
S207
BLK
LT GRN/WHT
BRN
S107
S222
W/ BOX
ORG/LT BLU
4
C422
(NOT USED)
ORG/ LT BLU
S211
S105
ORG/LT BLU
LT GRN/ WHT
WHT/ LT BLU
5 C220A
4 C220C
W/ BOX
ORG/LT BLU
BLK
S404
BLK
G400
RIGHT REAR PARK/STOP/ TURN LAMP
INTERIOR LIGHTS SYSTEM
BRN
ORG/LT BLU
11 C270B
CENTRAL JUNCTION BOX
LEFT TURN INDICATOR
RIGHT TURN INDICATOR
INSTRUMENT CLUSTER
15 C220C
BRN
WHT/LT BLU
BLK
RIGHT FRONT PARK/TURN LAMP
BLK
S217
BLK
G202
(NOT USED)
BRN
S215
3 C270B
W/ BOX
LT GRN/ORG
4
C423
(NOT USED)
BLK
S180
BLK
BRN
G108
RIGHT FRONT SIDE LAMP
BRN
LT GRN/ORG
S212
LT GRN/ORG
S104
LT GRN/ORG
W/ BOX
LT GRN/ORG
BLK
S404
BLK
G400
LEFT REAR PARK/STOP/ TURN LAMP
S921
BLK
S920
BLK
G201
BLK
BRN
LEFT
LEFT CENTER
CENTER
RIGHT CENTER
RIGHT
ROOF MARKER LAMPS
153486